APPENDIX I

ACCESS REMOVAL SHEET

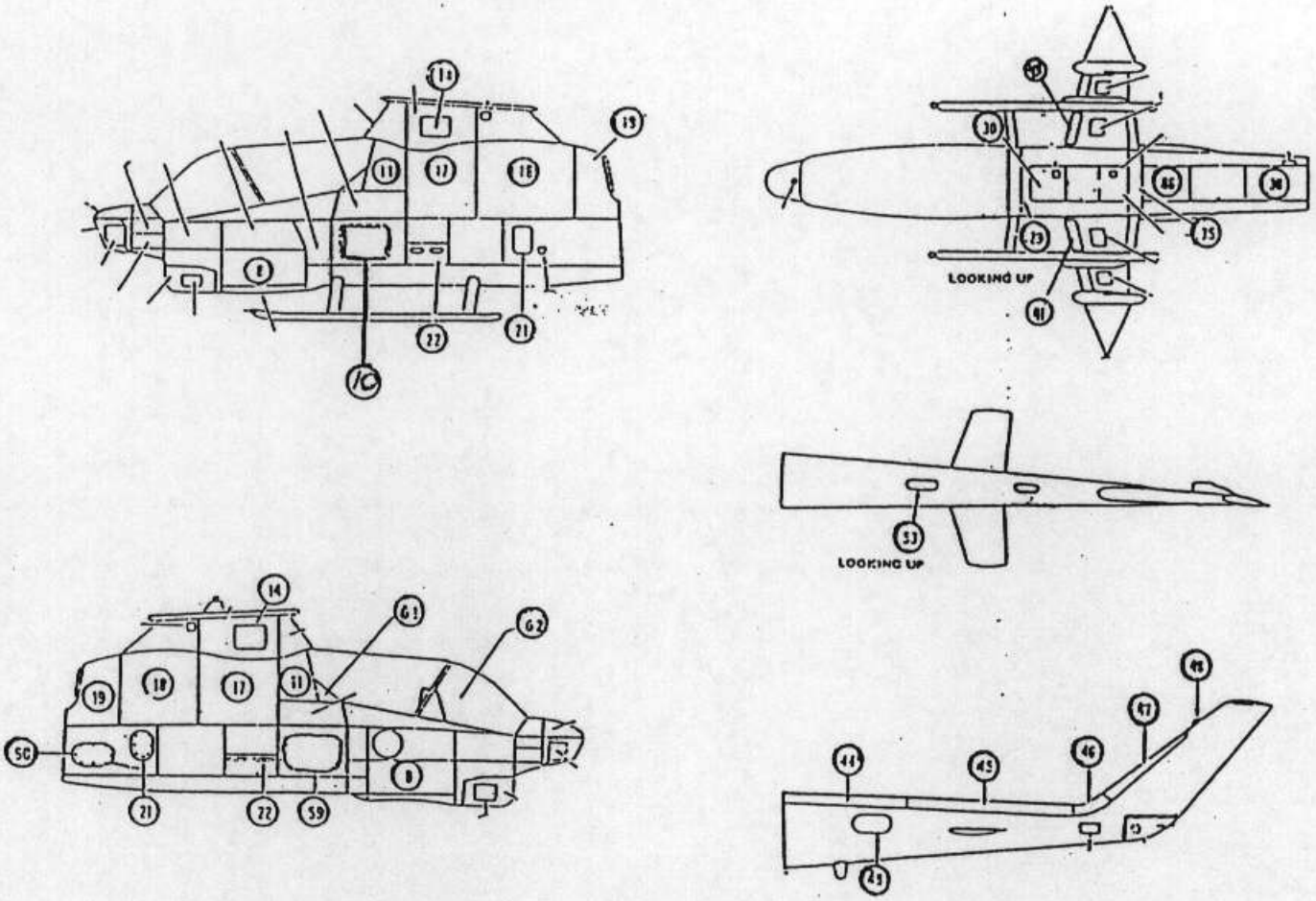

Remove or unlock the following numbered items for ACE and AACE profile assessment:

8. Ammunition Compartment Door (LH & RH) *
10. Access Center Cover L/H
11. Access Door (LH & RH)
14. Access Door (LH & RH)
17. Pylon Cowl Door (LH & RH)
18. Engine Cowl Door (LH & RH)
19. Tailpipe Fairing
21. Oil Cooler Duct Panel
22. Access Panels Assembly (LH & RH)
29. Forward Crosstube Fairing
30. Lower Skin Panel
35. Aft Crosstube Fairing
36. Lower Skin Panel
38. FM Sense Antenna
41. Wing Inboard Cover R/H
43. Wing Inboard Cover L/H
44. Drive Shaft Forward Cover
45. Drive Shaft Aft Cover
46. Gearbox Cover
47. Fin Drive Shaft Cover
48. Gearbox Fairing and Cover
49. Avionics Compartment Door (LH)
53. Tailboom Access Door
59. Access Center Cover (RH)
60. Aft Battery Compartment (RH)
61. Hydraulic Fwd Floor (soundproofing)
62. Canopy Doors (2 each)

* Remove ammo storage unit.

Encl 1

APPENDIX I

PREPARATION OF AIRCRAFT FOR ACE

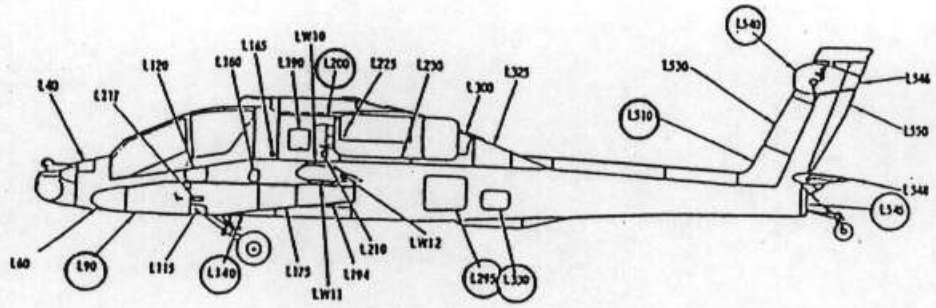

1. Open canopy, tilt CPG seat forward and remove soundproofing from canted frame.

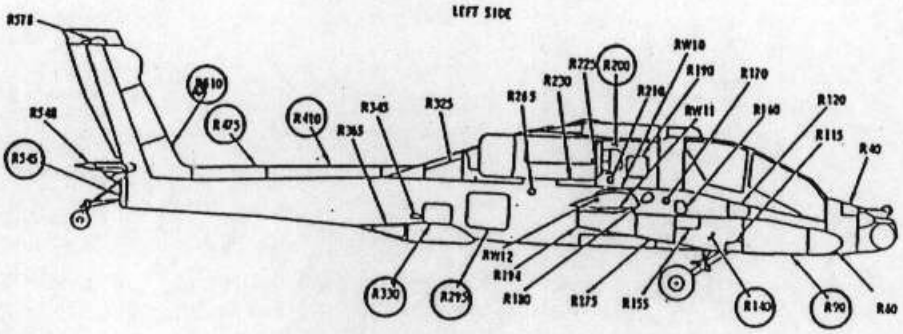

2. Open panels circled on left side diagram.

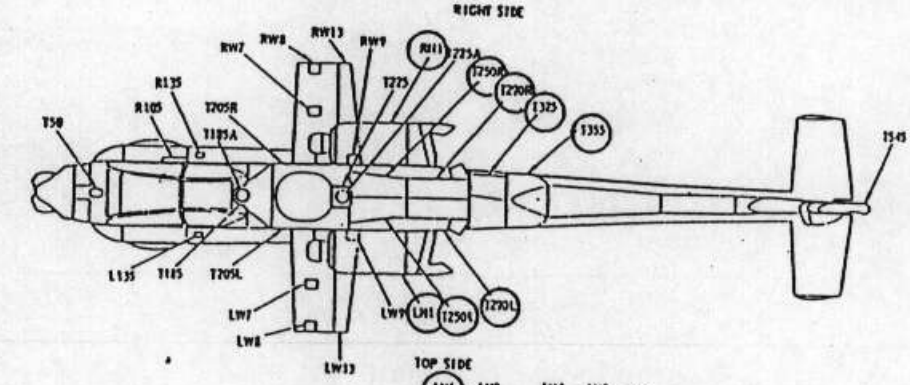

3. Open panels circled on right side diagram.

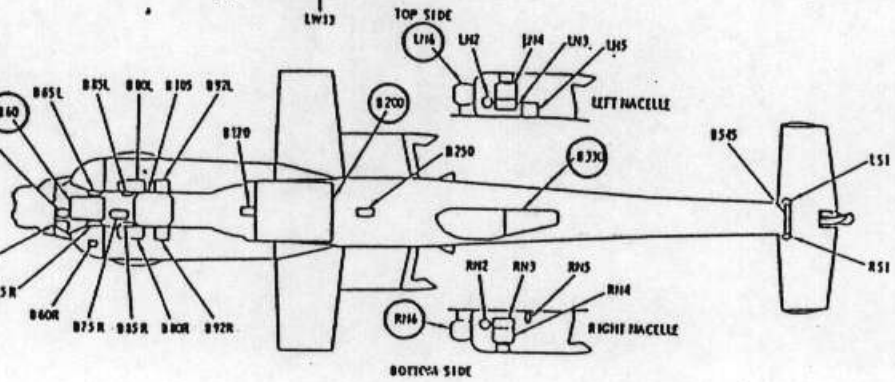

4. Open panels circled on top side diagram.

5. Open panels circled on bottom side diagram.

6. Remove Ammo Magazine.

Enc 2

APPENDIX I

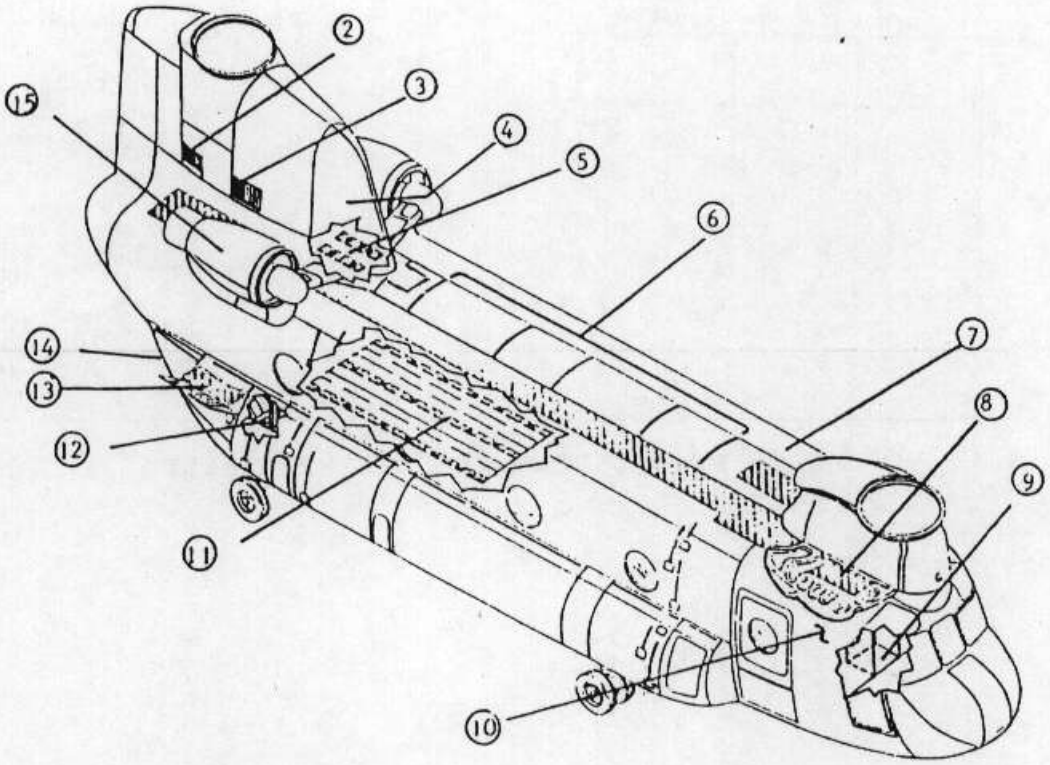

Unlock all doors and remove all equipment blocking the following items.

1. Open aft pylon work platform, L/H and R/H.
2. Remove aft transmission mount access panels, L/H and R/H.
3. Remove oil cooler compartment access panels, L/H and R/H.
4. Open pylon leading edge hinged fairing.
5. Remove combiner transmission attach point inspection plates (4).
6. Open tunnel covers.
7. Remove soundproofing from cabin roof area.
8. Open forward pylon work platforms, L/H & R/H.
9. Remove companionway floor panel.
10. Remove forward transmission soundproofing and drip pan.
11. Remove cargo floor panels(outboard two).
12. Remove ramp hinge inspection plate, F.S. 482, L/H and R/H.
13. Open engine work platform, L/H and R/H.
14. Open ramp.
15. Open engine cowlings, L/H and R/H.

Enc 3

OH-58D ACCESS PANEL REMOVAL

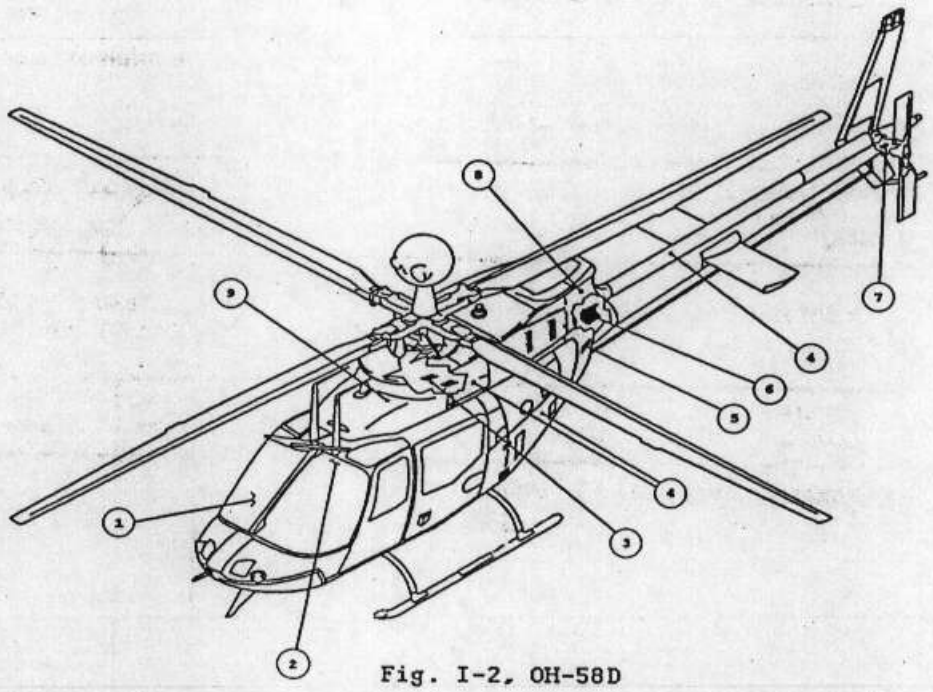

Fig. I-2, OH-58D

OPEN ALL DOORS. REMOVE ANY EQUIPMENT BLOCKING ACCESS TO THE FOLLOWING:

1. Lift crew seat cushions (AACE only).
2. Open overhead circuit breaker panels (3) (AACE only).
3. Remove transmission aft support bracket access covers (2).
4. Open indicated doors/covers.
5. Remove upper aft fuselage access covers, left-hand and right-hand.
6. Remove tailboom attachment access cover (right-hand side).
7. Remove tail gearbox mount lower access cover (AACE only).
8. Remove aft powertrain fairing.
9. Remove forward powertrain fairing.

enc 4

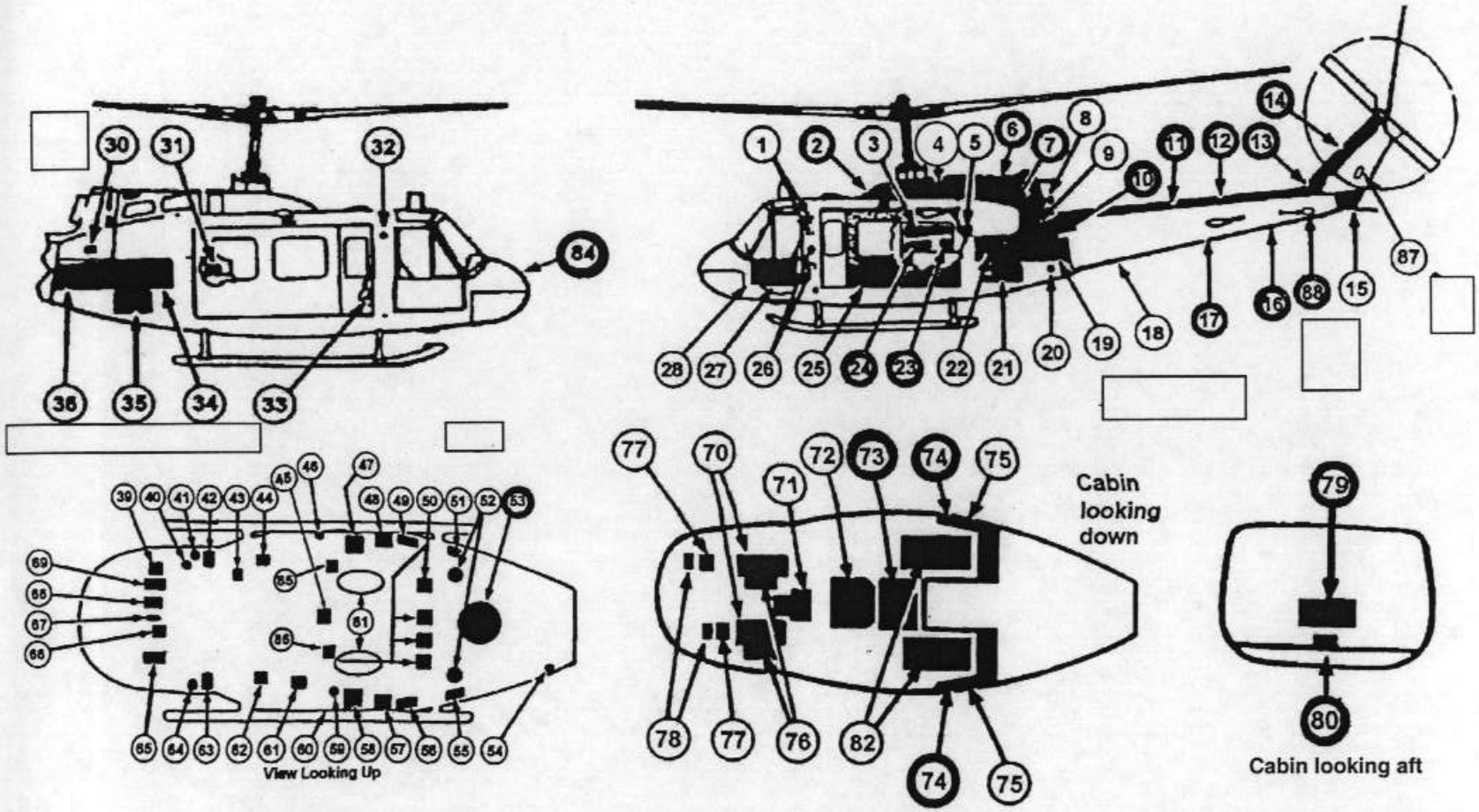

1. Unlock all doors and remove equipment blocking access to any of the items in the following paragraphs.

2. Remove soundproofing blankets from the cabin bulkheads. Drop the forward center roof blankets.

3. For ACE and CPCE, remove only those items identified by the more heavily circled numbers in the illustrations above.

4. Open overhead circuit breaker panel.

Enc 5

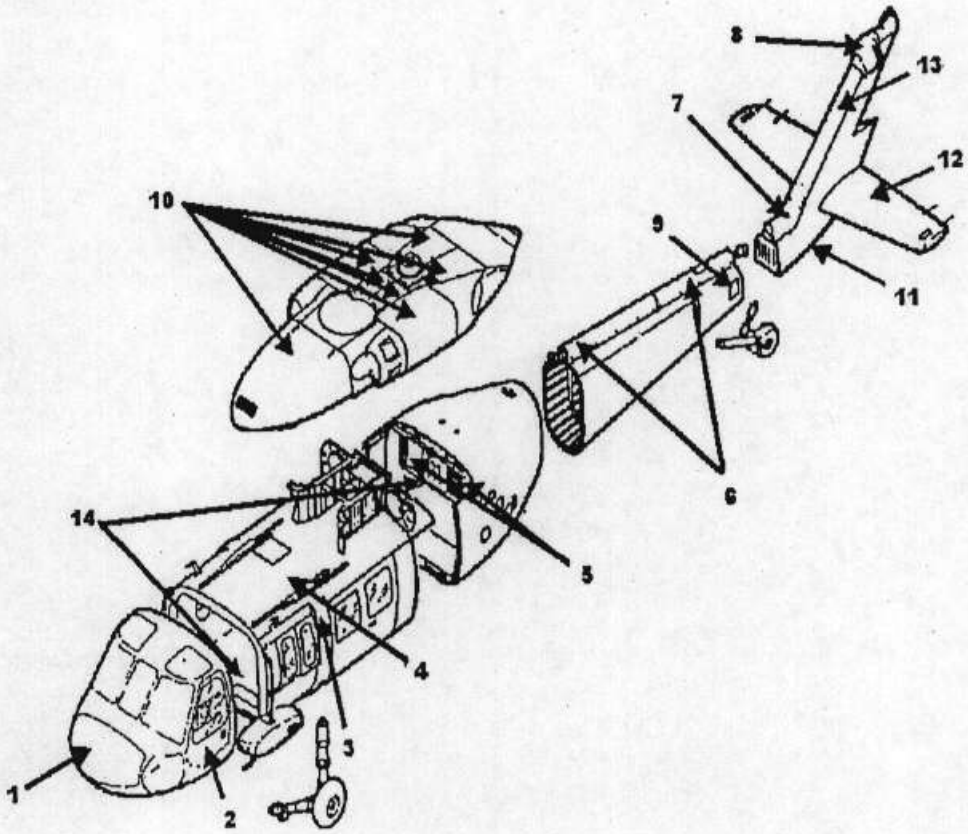

Figure 1. ACCESS PANEL REMOVAL

NOTE

Unlock all doors. Remove any equipment that may restrict the following:

1. Open electronic compartment access door (1B-2B-1) and remove radome, if so equipped.
2. Tilt pilot and copilot seats back if tilt capable. If not, remove seats.
3. Open upper shock strut doors (3T-3, 4T-4) or remove external stores hard point fairings (3T-35/3B-41/3B-42, 4T-36/4B-43/4B-44).
4. Remove soundproofing and drip pan beneath transmission. Remove or lower all soundproofing from cabin interior sides and ceiling. Include broom closets.
5. Remove cabin aft cargo doors and/or netting above fuel cell enclosures.
6. Open tailcone tail rotor drive shaft covers (5T-6T-9/5T-6T-10).
7. Remove intermediate gearbox cover (5T-6T-17).
8. Remove tail gearbox cover (5T-6T-12).
9. Remove tail landing gear shock strut access covers (5T-5B-18, 6T-6B-32).
10. Open cowling (3T-7, 4T-8), sliding cover (3T-4T-2), and pylon doors (3T-27, 4T-28).
11. Remove lower tail pylon 5-inch round access panel to flight controls (Army-Air Force), or fold tail pylon section (Navy only).
12. Slew stabilator to zero degrees.
13. Remove pylon drive shaft cover/FM antenna (5T-6T-11).
14. Open Quad Bay and Transition Section Access on aircraft so equipped (exterior).

Enc 6